DEUTERIUM ARC LAMP - P742ST

UV Light Source for Spectroscopy – 3 volt

Instrument

Agilent (Hewlett Packard) 1100

Electrical

Filament/Heater Voltage	Start	3.0 VDC
	Operating	1.5~2.0 VDC
Filament/Heater Current	Warm-up	4.5A Max
	Operating	3.5A Max
Discharge/Arc Voltage	Strike	@25° > 350VDC
	Operating	60 - 90 VDC
Discharge/Arc Current		10 - 300mA
Leads	Black	Filament & Cathode
	Red	Anode
Terminals		3-Pin Housing
Feature		See-through Aperture

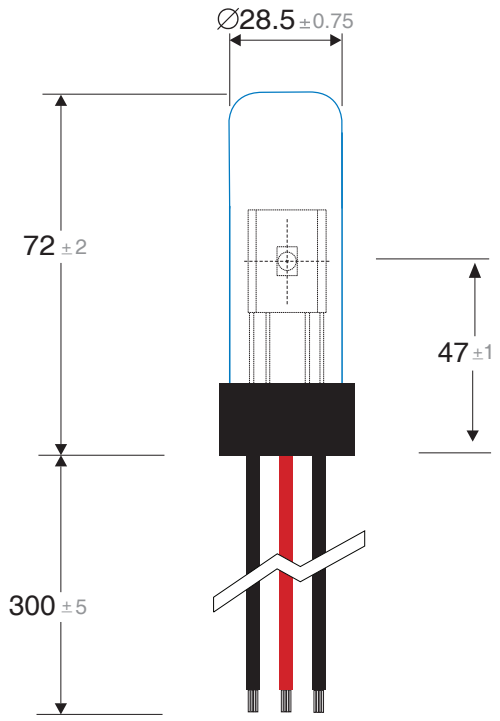

Dimensions in millimetres

Optical

Window	UV Transmitting Borosilicate
Aperture type	0.5mm Circular
Wavelength range	185nm - 400nm
Noise	$< 1 \times 10^{-4}$ Absorption units
Drift	$< 3 \times 10^{-3}$ Absorption units

Operational life

When radiant energy reaches 50% of the initial energy. Typical life 2000 hours
This Deuterium lamps is guaranteed for a period of one year from date of delivery or 2000 hours usage, which ever comes first.

Warranty

Free of charge replacement lamp will be provided where Photron is satisfied the following conditions have been adhered to.

- Lamp is returned to supplier freight paid.
- Lamp has been operated within our recommended specifications.
- Lamp has not failed due to accidental, misuse or transit damage.
- If a replacement lamp is supplied the validity of guarantee shall commence from delivery date of original lamp.

Spectrum of Deuterium Emissions

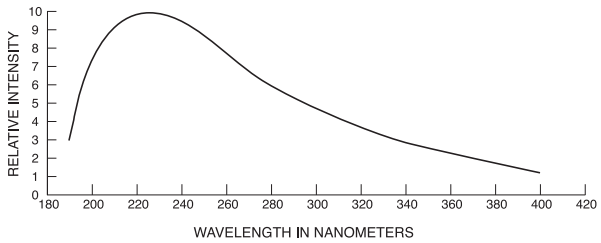

Precautions for use

- Do not subject the lamp to mechanical shock.
- Ensure glass envelope is free from foreign material. Lamp may be wiped using alcohol liquid.
- Caution! UV transmitting window is very thin. Handle with care.
- Care must be taken not to contact lamp with bare hand, temperature can reach over 200°C during operation.
- UV Radiation is harmful to the eyes. Do not observe light output directly.
- Deuterium lamps operate at high voltages. Extreme caution is required to prevent electrical shock.

PHOTRON PTY.LTD.
LIGHTEN YOUR HORIZON

Unit 5 - 3 Vesper Drive, Narre Warren, Victoria, Australia 3805
Tel: 6-13-9704-9933 • Fax: 6-13-9704-6289
sales@photron.com.au • service@photron.com.au
www.photronlamp.com
Quality Certified for ISO9001:2000